IPP1060eco

Sets eco standards for cultivation below room temperature: unmatched energy efficiency, best values for heat-up, cool-down and recovery times.



With the help of our model selection, dimensional model sketches and extensive technical data for download, you will find your perfect Peltier-cooled incubator. Flexibility and technical features of our appliances meet all possible needs. Put us to the test!

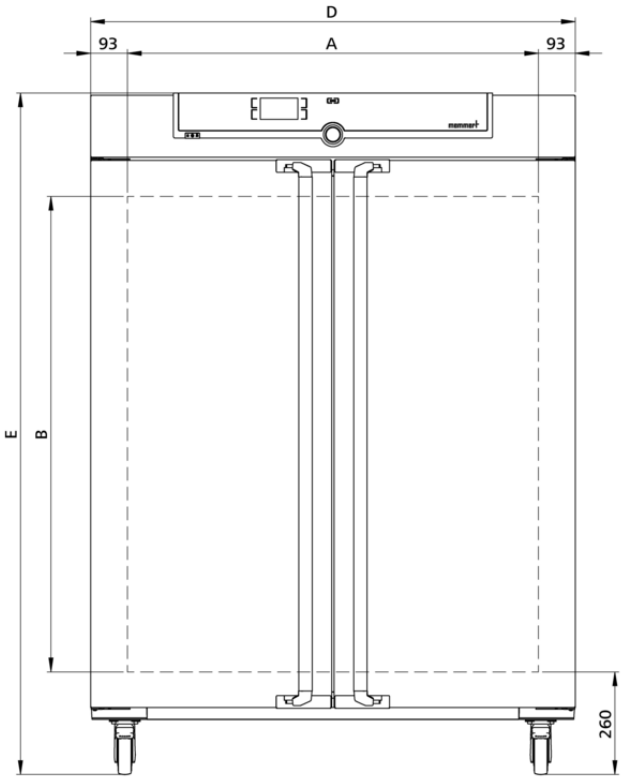

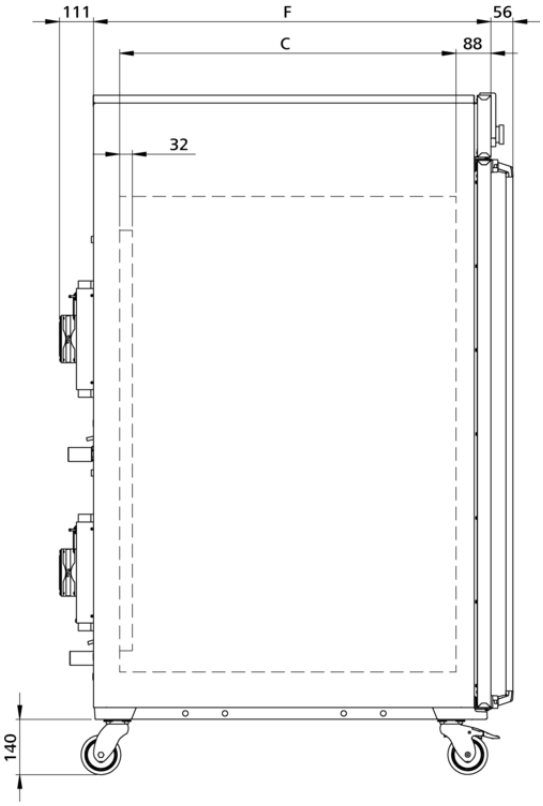

Memmert GmbH + Co. KG | Tel. +49 (0) 9122/925-0 | E-Mail info@memmert.com

Temperature

Setting temperature range	0 to +70 °C
Working temperature range	without light: from 0 (at least 20 below ambient temperature) to +70°C
Setting accuracy temperature	0.1 °C
Temperature sensor	1 Pt100 sensor DIN class A in 4-wire-circuit

Control technology

Language setting	German, English, Spanish, French, Polish, Czech, Hungarian, Italian, Chinese
ControlCOCKPIT	SingleDISPLAY. Adaptive multifunctional digital PID-microprocessor controller with high-definition TFT-colour display
Timer	Digital backwards counter with target time setting, adjustable from 1 minute to 99 days
Function SetpointWAIT	the process time does not start until the set temperature is reached
Calibration	three freely selectable temperature values
adjustable parameters	temperature (Celsius or Fahrenheit), programme time, time zones, summertime/wintertime

Ventilation

Convection	forced ventilation by Peltier fan

Communication

Documentation	programme stored in case of power failure
Programming	AtmoCONTROL software for reading out, managing and organising the data logger via Ethernet interface (temporary trial version can be downloaded). Licence for AtmoCONTROL software available as accessory (on demand).

Safety

Temperature control	adjustable electronic overtemperature monitor and mechanical temperature limiter
Autodiagnostic system	for fault analysis

Heating concept

Peltier	energy-saving Peltier heating-/cooling system integrated in the rear (heat pump principle)

Stainless steel interior

Dimensions	$w_{(A)}$ x $h_{(B)}$ x $d_{(C)}$: 1040 x 1200 x 850 mm (d less 32 mm for fan - Peltier)
Volume	1060 l
Max. number of internals	14
Max. loading of chamber	200 kg
Max. loading per internal	20 kg

Standard equipment

Works calibration certificate	for +10 °C, +25 °C and +40 °C
Door	inner glass doors
Door	fully insulated stainless steel doors with2-point locking (compression door lock)
Internals	2 stainless steel grid(s), electropolished

Textured stainless steel casing

Dimensions	$w_{(D)}$ x $h_{(E)}$ x $d_{(F)}$: 1224 x 1720 x 1005 mm (d +56mm door handle & +111mm Peltier element)
Installation	on lockable castors
Housing	rear zinc-plated steel

Electrical data

Voltage **Electrical load**	230 V, 50/60 Hz approx. 1300 W
Voltage **Electrical load**	115 V, 50/60 Hz approx. 1300 W

Ambient conditions

Set Up	The distance between the wall and the rear of the appliance must be at least 15 cm. The clearance from the ceiling must not be less than 20 cm and the side clearance from walls or nearby appliances must not be less than 5 cm.
Ambient temperature	16 ºC to 40 ºC
Humidity rh	max. 70 %, non-condensing
Altitude of installation	max. 2,000 m above sea level
Overvoltage category	II
Pollution degree	2

Packing/shipping data

Transport information	The appliances must be transported upright
Customs tariff number	8419 8998
WEEE-Reg.-No.	DE 66812464
Dimensions approx incl. carton	w x h x d: 1370 x 1970 x 1300 mm
Net weight	approx. 248 kg
Gross weight carton	approx. 327 kg

Standard units are safety-approved and bear the test marks

CE