IF450bw

The Memmert blanket warmer IFbw is a Class I medical device.



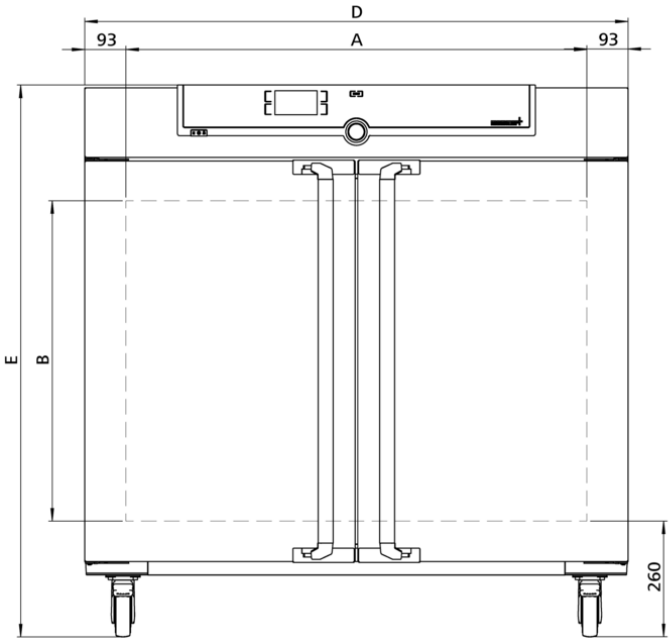

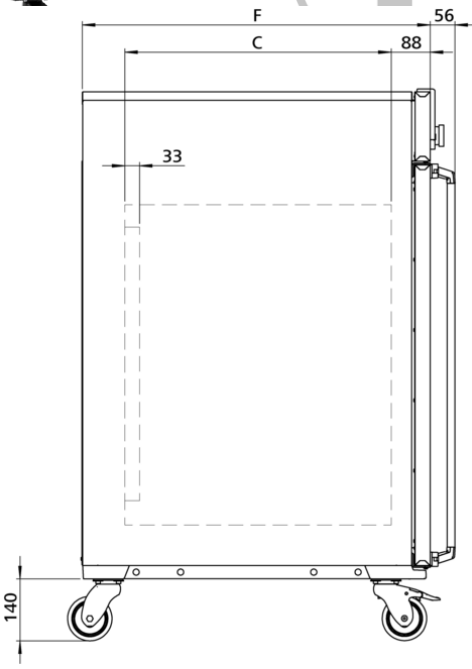

Memmert GmbH + Co. KG | Tel. +49 (0) 9122/925-0 | E-Mail info@memmert.com

Temperature

Setting temperature range	+20 to +80 °C
Working temperature range	min. 10°C above ambient up to +80°C
Setting accuracy temperature	0.1 °C
Temperature sensor	1 Pt100 sensor DIN class A in 4-wire-circuit

Control technology

ControlCOCKPIT	SingleDISPLAY. Adaptive multifunctional digital PID-microprocessor controller with high-definition TFT-colour display
Timer	Digital backwards counter with target time setting, adjustable from 1 minute to 99 days
Function SetpointWAIT	the process time does not start until the set temperature is reached
Calibration	three freely selectable temperature values
Adjustable parameters	temperature (Celsius or Fahrenheit), fan speed, air flap position, programme time, time zones, summertime/wintertime
adjustable parameters	temperature (Celsius or Fahrenheit), programme time, time zones, summertime/wintertime

Ventilation

Fan	forced air circulation in working chamber, fixed value 100 %

Communication

Documentation	programme stored in case of power failure
Programming	AtmoCONTROL software for reading out, managing and organising the data logger via Ethernet interface (temporary trial version can be downloaded). Licence for AtmoCONTROL software available as accessory (on demand).

Safety

Temperature control	adjustable electronic overtemperature monitor and mechanical temperature limiter TB, protection class 1 according to DIN 12880 to switch off the heating approx. 20°C above nominal temperature
Autodiagnostic system	for fault analysis

Stainless steel interior

Dimensions	w(A) x h(B) x d(C): 1040 x 720 x 600 mm (d less 39 mm for fan)
Interior	easy-to-clean interior,made of stainless steel, reinforced by deep drawn ribbing with integrated and protected large-area heating on four sides
Volume	449 l
Max. number of internals	8
Max. loading of chamber	300 kg
Max. loading per internal	30 kg

Standard equipment

Works calibration certificate	incl. works calibration certificate for +37°C
Door	fully insulated stainless steel door with 2-point locking (compression door lock)
Internals	2 stainless steel grid(s), electropolished

Textured stainless steel casing

Dimensions	w(D) x h(E) x d(F): 1224 x 1247 x 784 mm (d +56mm door handle)
Housing	rear zinc-plated steel

Electrical data

Voltage **Electrical load**	230 V, 50/60 Hz approx. 1800 W
Voltage **Electrical load**	115 V, 50/60 Hz approx. 1500 W

Ambient conditions

Set Up	The distance between the wall and the rear of the appliance must be at least 15 cm. The clearance from the ceiling must not be less than 20 cm and the side clearance from walls or nearby appliances must not be less than 5 cm.
Altitude of installation	max. 2,000 m above sea level
Ambient temperature	+5 °C to +40 °C
Humidity rh	max. 80 %, non-condensing
Overvoltage category	II
Pollution degree	2

Packing/shipping data

Transport information	The appliances must be transported upright
Customs tariff number	8419 8998
Country of origin	Federal Republic of Germany
WEEE-Reg.-No.	DE 66812464
Dimensions approx incl. carton	w x h x d: 1330 x 1440 x 1050 mm
Net weight	approx. 161 kg
Gross weight carton	approx. 227 kg

Standard units are safety-approved and bear the test marks