UF750DW

Custom built dishwasher with air circulation

The Memmert heating oven dishwasher UF750DW is specially adapted to the EN50242 standard and complies with the standard's specifications.
On this page, you can find all the essential technical data on the Memmert heating oven dishwasher UF750DW .
Our customer relations team will be pleased to help if you want further information. If you should require a customised special solution, please contact our technical specialists at m360@memmert.com.

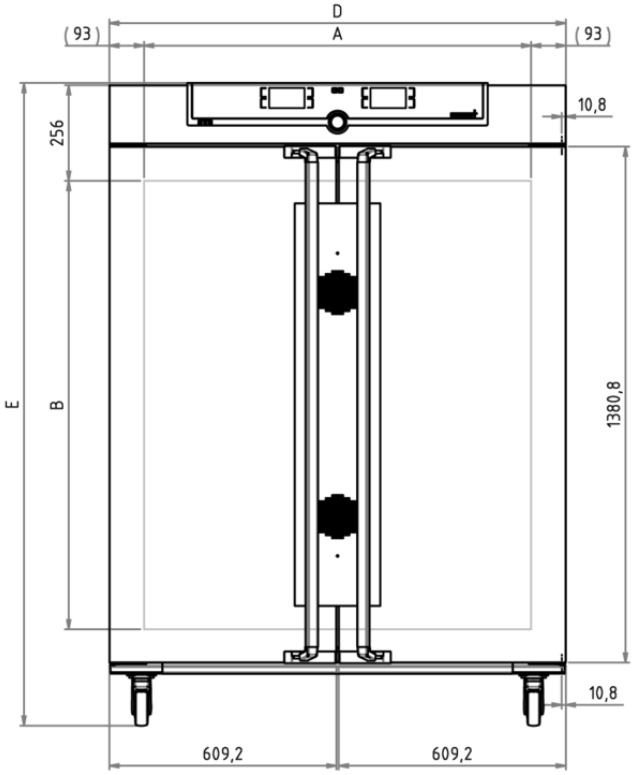

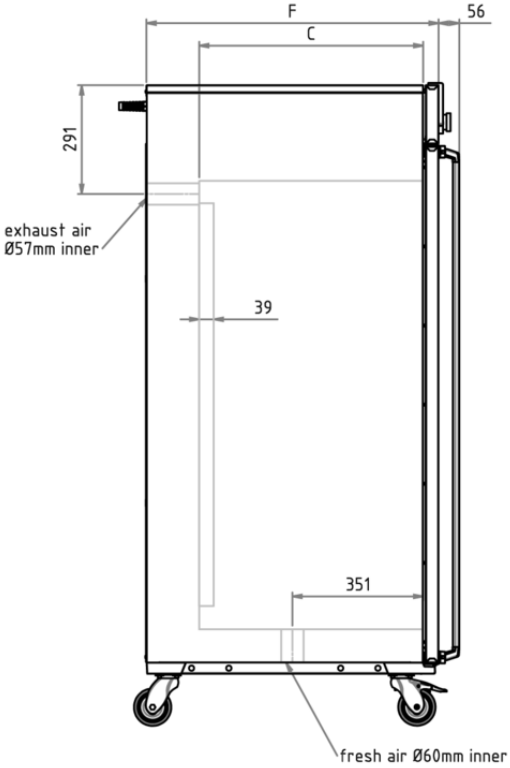

Temperature

Working temperature range	at least 10 above ambient temperature to +100°C
resolution of display for actual values	0.1°C
resolution of display for setpoint values	0,1°C
resolution of display/setting accuracy	0.5°C
Temperature sensor	2 Pt100 sensors DIN Class A in 4-wire-circuit for mutual monitoring, taking over functions in case of an error

Control technology

ControlCOCKPIT	TwinDISPLAY. Adaptive multifunctional digital PID-microprocessor controller with 2 high-definition TFT-colour displays.
Language setting	German, English, Spanish, French, Polish, Czech, Hungarian
Timer	Digital backwards counter with target time setting, adjustable from 1 minute to 99 days
Function SetpointWAIT	the process time does not start until the set temperature is reached
Calibration	three freely selectable temperature values
adjustable parameters	temperature (Celsius or Fahrenheit), fan speed, air flap position, programme time, time zones, summertime/wintertime

Ventilation

Fan	forced air circulation by 2 quiet air turbines, adjustable in 10 % steps for each segment individually
Fresh air	Admixture of pre-heated fresh air by electronically adjustable air flap
Vent	vent connection with restrictor flap

Communication

Documentation	programme stored in case of power failure
Programming	AtmoCONTROL software on a USB stick for programming, managing and transferring programmes via Ethernet interface or USB port

Safety

Temperature control	independently working, digitally adjustable electronic micro-processor overtemperature monitor TWW, protection class 3.1 (max-value for overtemperature, min-value for undertemperature)
Temperature control	mechanical temperature limiter TB, protection class 1 according to DIN 12880 to switch off the heating approx. 20°C above nominal temperature
AutoSAFETY	additionally integrated over- and undertemperature protection "ASF", automatically following the setpoint value at a preset tolerance range, alarm in case of over- or undertemperature, heating is switched off in case of overtemperature
Autodiagnostic system	for fault analysis
Alarm	visual and acoustic

Standard equipment

Works calibration certificate	for +80°C
Door	fully insulated stainless steel door with2-point locking (compression door lock), lockable

Stainless steel interior

Interior	easy-to-clean interior,made of stainless steel, reinforced by deep drawn ribbing with integrated and protected large-area heating on four sides
Volume	749 l
Dimensions	$w_{(A)}$ x $h_{(B)}$ x $d_{(C)}$: 1040 x 1200 x 600 mm
Max. loading of chamber	300 kg
Max. loading per internal	60 kg

Textured stainless steel casing

Dimensions	$w_{(D)}$ x $h_{(E)}$ x $d_{(F)}$: 1224 x 1720 x 1035 mm (d +56mm door handle)
Housing	rear zinc-plated steel

Electrical data

Voltage **Electrical load**	400 V and 3x 230 V w/o neutral, 50/60 Hz approx. 7000 W

Packing/shipping data

Transport information	The appliances must be transported upright
Customs tariff number	8419 8998
Country of origin	Federal Republic of Germany
WEEE-Reg.-No.	DE 66812464
Dimensions approx incl. carton	w x h x d: 1330 x 1910 x 1050 mm
Net weight	approx. 225 kg
Gross weight carton	approx. 295 kg

Standard units are safety-approved and bear the test marks

Memmert GmbH + Co. KG | Tel. +49 (0) 9122/925-0 | E-Mail info@memmert.com