UF160plus

Precise drying, heating, ageing, burn-in and hardening in research, science, industry and quality assurance.

The universally applicable lab oven U is Memmert's classic appliance for temperature control in science, research and material tests in industry. The technologically perfected masterpiece made of high-quality, hygienic, easy-to-clean stainless steel leaves nothing to be desired in terms of ventilation and control technology, overtemperature protection and precisely tuned heating technology.
On this page, you can find all the essential technical data on the universal Memmert lab oven. Our customer relations team will be pleased to help if you want further information. If you should require a customised special solution, please contact our technical specialists at sales@memmert.com.

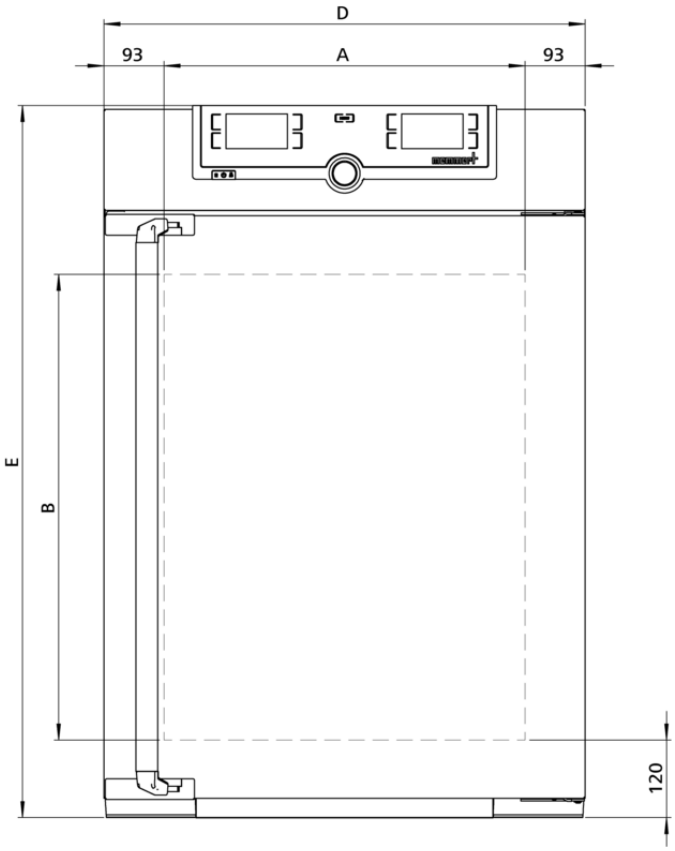

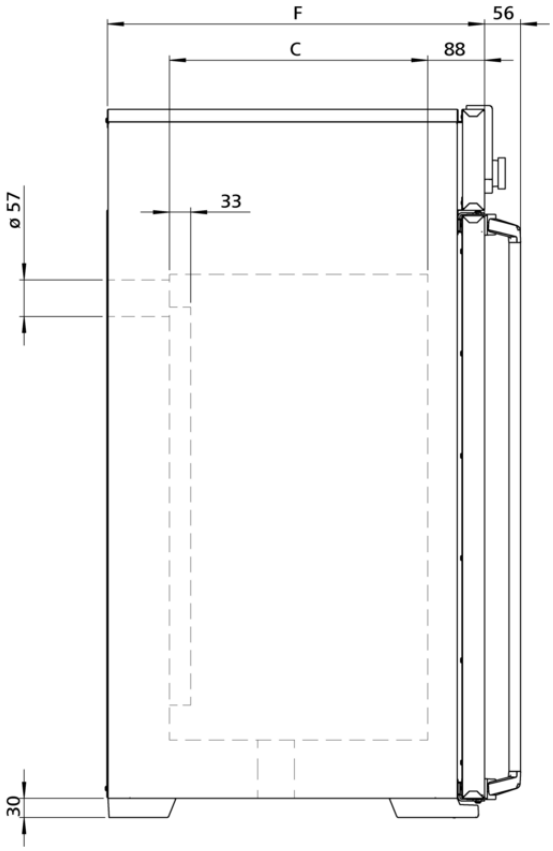

Memmert GmbH + Co. KG | Tel. +49 (0) 9122/925-0 | E-Mail info@memmert.com

Temperature

Working temperature range	at least 5 (UN/UNplus/UNm/UNmplus) or 10 (UF/UFplus/UFm/UFmplus) above ambient temperature to +300 °C
Setting accuracy temperature	up to 99.9 °C: 0.1 / from 100 °C: 0.5
Setting temperature range	+20 to +300 °C
Temperature sensor	2 Pt100 sensors DIN Class A in 4-wire-circuit for mutual monitoring, taking over functions in case of an error

Control technology

ControlCOCKPIT	TwinDISPLAY. Adaptive multifunctional digital PID-microprocessor controller with 2 high-definition TFT-colour displays.
Language setting	German, English, Spanish, French, Polish, Czech, Hungarian
Timer	Digital backwards counter with target time setting, adjustable from 1 minute to 99 days
Function HeatBALANCE	adapting the distribution of the heating performance of the upper and lower heating circuit from -50 % to +50 %
Function SetpointWAIT	the process time does not start until the set temperature is reached
Calibration	three freely selectable temperature values
adjustable parameters	temperature (Celsius or Fahrenheit), fan speed, air flap position, programme time, time zones, summertime/wintertime

Ventilation

Fan	forced air circulation by quite air turbine, adjustable in 10 % steps for each segment individually
Fresh air	Admixture of pre-heated fresh air by electronically adjustable air flap
Vent	vent connection with restrictor flap

Communication

Documentation	programme stored in case of power failure
Programming	AtmoCONTROL software on a USB stick for programming, managing and transferring programmes via Ethernet interface or USB port

Safety

Temperature control	mechanical temperature limiter TB, protection class 1 according to DIN 12880 to switch off the heating approx. 20°C above nominal temperature
Temperature control	overtemperature monitor TWW, protection class 3.1 or adjustable temperature limiter TWB, protection class 2, selectable on display
AutoSAFETY	additionally integrated over- and undertemperature monitor "ASF", automatically following the setpoint value at a preset tolerance range, alarm in case of over- or undertemperature, heating is switched off in case of overtemperature
Autodiagnostic system	for fault analysis
Alarm	visual and acoustic

Standard equipment

Works calibration certificate	Calibration at +160°C
Door	fully insulated stainless steel door with 2-point locking (compression door lock)
Internals	2 stainless steel grid(s), electropolished

Stainless steel interior

Dimensions	$w_{(A)}$ x $h_{(B)}$ x $d_{(C)}$: 560 x 720 x 400 mm (d less 39 mm for fan)
Interior	easy-to-clean interior,made of stainless steel, reinforced by deep drawn ribbing with integrated and protected large-area heating on four sides
Volume	161 l
Max. number of internals	8
Max. loading of chamber	210 kg
Max. loading per internal	20 kg

Textured stainless steel casing

Dimensions	$w_{(D)}$ x $h_{(E)}$ x $d_{(F)}$: 745 x 1104 x 584 mm (d +56mm door handle)
Housing	rear zinc-plated steel

Electrical data

Voltage **Electrical load**	230 V, 50/60 Hz approx. 3200 W
Voltage **Electrical load**	115 V, 50/60 Hz approx. 1800 W

Ambient conditions

Set Up	The distance between the wall and the rear of the appliance must be at least 15 cm. The clearance from the ceiling must not be less than 20 cm and the side clearance from walls or nearby appliances must not be less than 5 cm.
Altitude of installation	max. 2,000 m above sea level
Ambient temperature	+5 °C to +40 °C
Humidity rh	max. 80 %, non-condensing
Overvoltage category	II
Pollution degree	2

Packing/shipping data

Transport information	The appliances must be transported upright
Customs tariff number	8419 8998
Country of origin	Federal Republic of Germany
WEEE-Reg.-No.	DE 66812464
Dimensions approx incl. carton	w x h x d: 830 x 1300 x 800 mm
Net weight	approx. 96 kg
Gross weight carton	approx. 122 kg

Standard units are safety-approved and bear the test marks